HAWI

Mario Ferrarini | 2024



HAWI

Mario Ferrarini | 2024

The collaboration between Lapalma and Mario Ferrarini continues with favorable winds, as demonstrated by the expansion of the HAWI collection, first launched at the Salone del Mobile 2024.
Characterized by a timeless and essential aesthetic, in line with the other offerings in the Lapalma catalog, HAWI introduces an intriguing twist through the vibrant contrast between the solidity of the frame and the graceful backrest, which, while seamlessly integrated, becomes lighter in its design.
Presented in 2024 as a chair, stackable and extremely versatile, the collection expands in 2025 with the addition of the stool, available in two heights.

HAWI

Mario Ferrarini | 2024

| S420 4-legged stackable

Stackable chair with powder-coated steel frame and polypropylene backrest and seat in various colours. The seat can also be upholstered in fabric or multilayer wood in various finishes. Nylon feet with integrated felt.

EPD certification

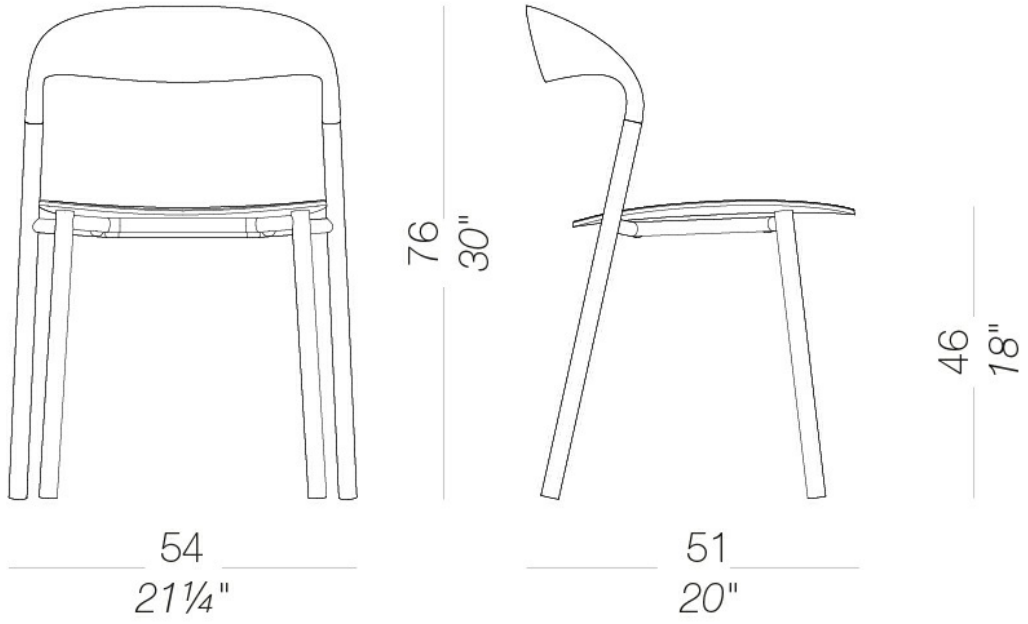

HAWI

Mario Ferrarini | 2024

| S425 counter stool 4 metal legs H65

H65 stool with powder-coated steel frame and polypropylene backrest and seat in various colors. The seat can also be upholstered in fabric or multilayer wood in various finishes. Nylon feet with integrated felt

EPD certification

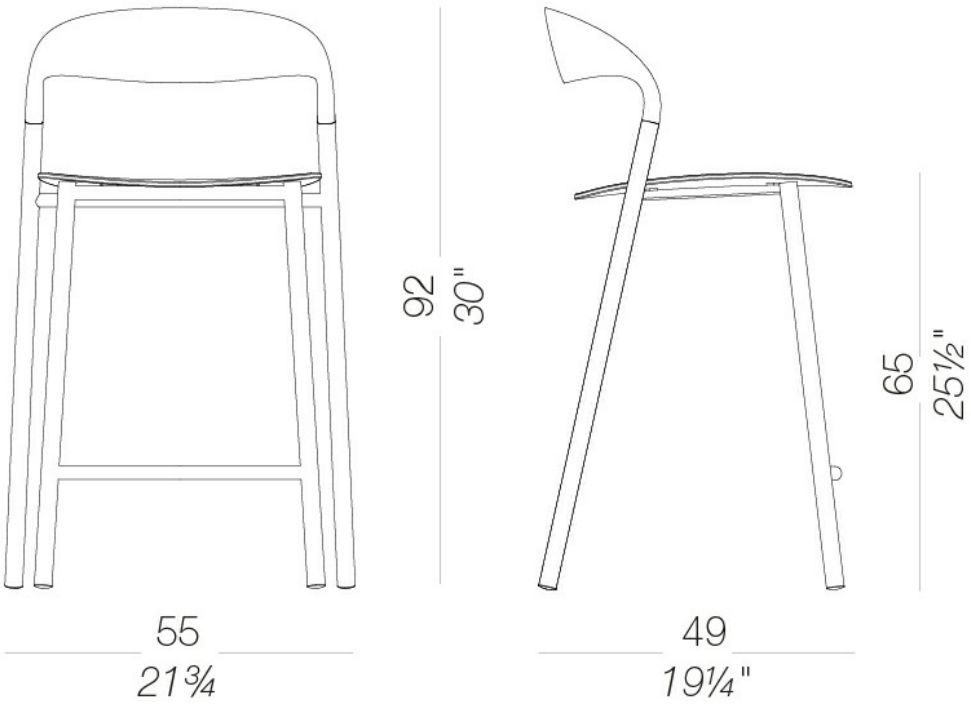

HAWI

Mario Ferrarini | 2024

| S427 Swivel stool height adjustable H79 ÷ 104

Height adjustable stool with powder-coated stainless steel frame. Seat and backrest in polypropylene in several colors. The seat is also available upholstered or in plywood in different finishes.

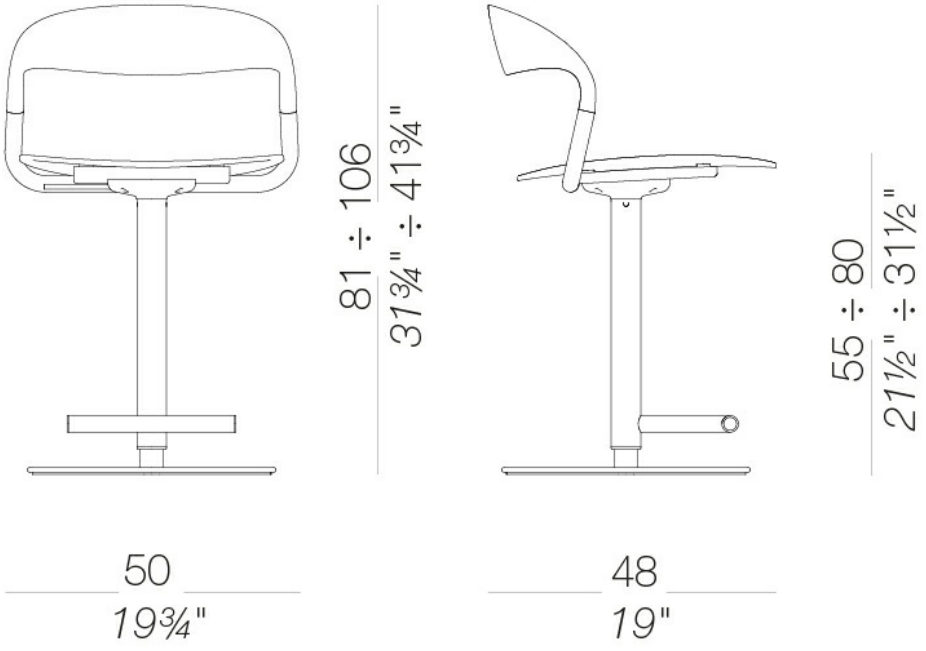

HAWI

Mario Ferrarini | 2024

| S426 bar stool 4 metal legs H75

Stool with steel base powder coated. Seat and backrest in polypropylene in several finishes. The seat is also available upholstered or in plywood in different finishes. Glides in nylon with felt.

EPD certification

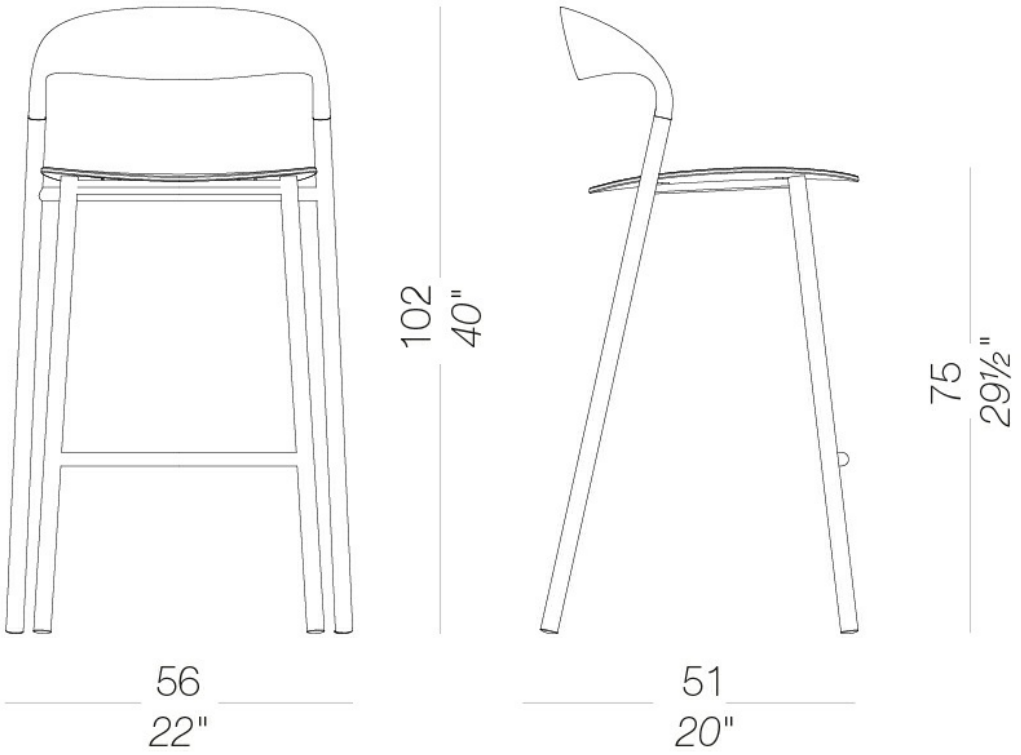

HAWI

Mario Ferrarini | 2024

frame



metal
powder coating
16 Colors

seat/back



plastics
polypropylene
16 Colors

seat



fabric
Hallingdal 65 - Grade C
58 Colors



wood
blanched oak
1 Colors



fabric
Canvas 2 - Grade C
45 Colors



fabric
Steelcut Trio 3 - Grade D
52 Colors



fabric
Steelcut 3 - Grade D
40 Colors



fabric
Remix 3 - Grade C
72 Colors



fabric
Fiord 2 - Grade C
39 Colors

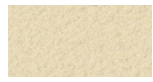

fabric
Divina - Cat. D
60 Colors



fabric
Tonica 2 - Grade C
39 Colors

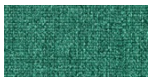

fabric
Medley - Grade A
37 Colors



fabric
Maya - Grade A
43 Colors



fabric
Jet - Grade A
66 Colors

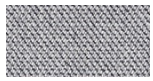

fabric
Capture - Grade B
60 Colors



fabric
Crisp - Grade B
40 Colors



fabric
Iris - Grade B
34 Colors



ecoleather
Valencia - Grade B
72 Colors



fabric
Grain - Grade. B
50 Colors



fabric
Re-wool - Grade C
25 Colors



fabric
Main Line Flax - Grade. B
57 Colors



fabric
Blazer - Grade. C
77 Colors

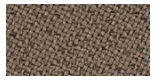

fabric
Chili - Grade. A
47 Colors

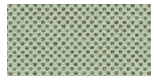

fabric
Umber - Grade. B
36 Colors



fabric
Nobel - Grade. C
30 Colors



fabric
Naveli - Grade. C
24 Colors



fabric
Fiocco - Grade. B
34 Colors



fabric
Atrium - Grade. C
16 Colors



fabric
Panama - Grade. A
48 Colors

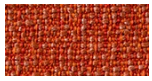

fabric
Sorrento - Grade. B
22 Colors



plastics
polypropylene
16 Colors

HAWI

Mario Ferrarini | 2024

consult the porfolio for the range of colors, fabrics, eco-leather, soft-leather.

use and maintenance instructions
Clean all parts in wood, leather, fabric and metal with a damp cloth or a diluted neutral cleaner. Do not use cleaners with alcohol, bleach, solvent or abrasive products. Any liquid spilt on the product must be wiped up immediately.When lifting or moving the product, hold it on the structure and not under the seat. The product should not be subjected to unbalanced weights, as it is designed for a proper rest on the foothold (on four legs or on the base). Our company relieves from any responsibility in case of damage caused to fragile floors. Avoid any improper use of the product: do not step on the product, on the footrest or on the armrests. Avoid any movements that could compromise the proper functionality of the product or the safety of the users.Wood and leather, being natural materials, could be easily damaged. Small impurities or imperfections are within quality standard range.Do not expose the product to weather conditions or atmospheric agents, nor to heat sources over 40°C. Also products for outdoor use could be afflicted by atmospheric agents. The product could undergo possible exterior changes due to particular exposure to heat, humidity and saltiness. An appropriate and frequent maintenance and cleaning of the product enhances its durability. The product could change colour and shade, if exposed to direct sunlight. Maintenance has to be carried out by experienced staff. Dispose of the package only after assembling the product, in order to avoid the loss of ironmongery and components. Once the product has been dismantled, the product itself or its components must be given to the public garbage disposal system, according to the legislation in force.